Puzzled Pint

September 2016

LAB RATS

SOLUTION

Each rat had run its own maze so many times, it knew the decisions by heart.
When they ran each other's mazes, they learned what had been done to them.

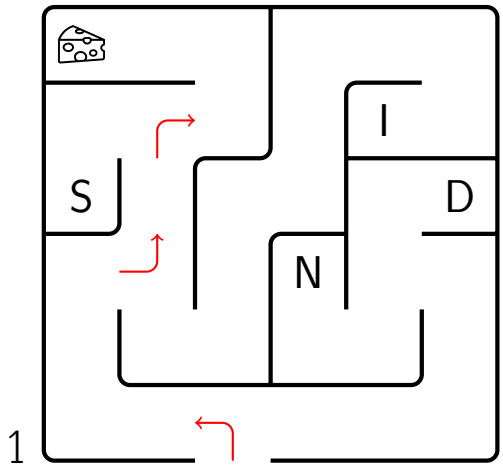

1

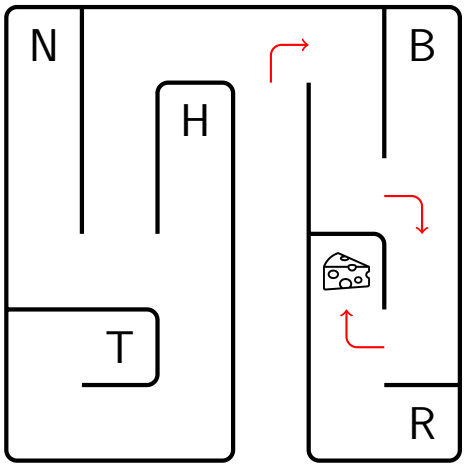

2

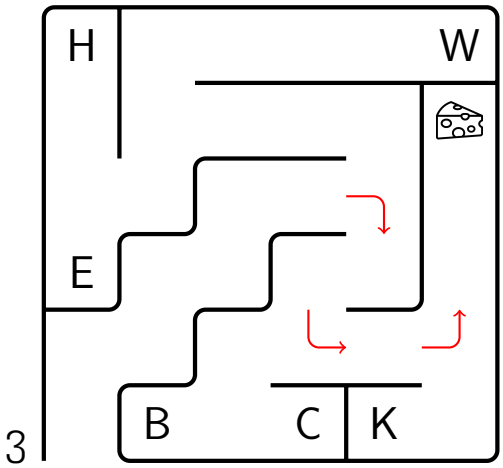

3

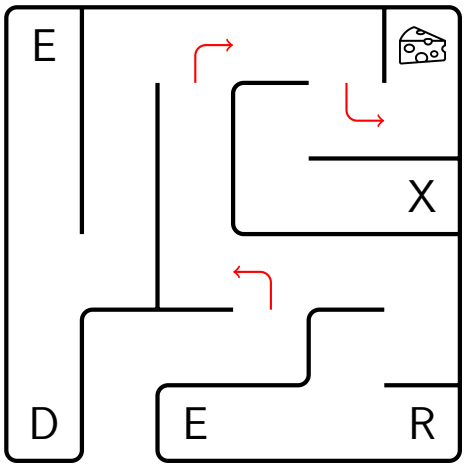

4

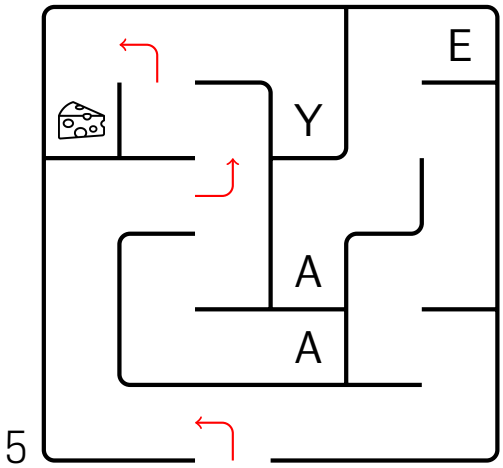

5

LLR		T	H	E	Y
RRR	D		B	E	E
RLL	N	B		R	A
LRL	I	N	W		A
LLL	S	H	E	D	

Rat 1 makes turns L, L, R in each maze, producing the letters THEY in mazes 2-5. Continue with the other rats, to get the grid above. The final 11 letter answer is BRAINWASHED.

Puzzle by Bryan C. (St. Louis)